MVSS

The MVSS stainless steel series vibrators are characterized by their total protection from liquids, dusts, aggressive agents and contaminants, thanks to the AISI 316L stainless steel casing and external components.
Line MVSS-P is available for potentially explosive dust atmospheres in conformity with ATEX Directive 94/9/EC.

Technical features

Power supply
Three-phase voltage from 24V to 690V, 50Hz or 60Hz or single-phase 100-130V 60Hz and 200-240V, 50Hz; suitable for use with an inverter from 20Hz to the base frequency with constant torque load profile.

Polarity
2, 4, 6 and 8 poles.

Conformity with European Directives
Low Voltage 2006/95/EC.

Reference Regulations
EN 60034-1.

Functioning
Continual service (S1) at maximum declared centrifugal force and electric power.
Intermittent services are also possible depending on the type of vibrator and the operating conditions. For detailed information, contact our technical assistance office.

Centrifugal force
Range extended up to 4300 Kgf. (42.4 KN), with centrifugal force adjustable from 0 to 100%.

Mechanical protection
IP 66 according to IEC 529, EN 60529.

Insulation class
Class F (155°C), class H (180°C) on request.

Tropicalization
Standard on all vibrators, with vacuum encapsulation up to size 35, with "drop by drop" trickle system for larger sizes.

Ambient temperature
From -20°C to +40°C. Versions for higher or lower temperatures are available on request.

Vibrator thermal protection
Standard PTC rated thermistor heat detectors 130°C (DIN 44081-44082) on size 70, on request for smaller sizes. On request, thermistors with different temperatures and anti-condensation heaters.

Fixing of the vibrator
In all positions and therefore without restriction.

Lubrication
All vibrators are lubricated in the factory and do not require further lubrication if used in normal operating conditions ("FOR LIFE" lubrication). In heavy duty operating conditions periodical re-lubrication may be applied to size 35 and larger.

Terminal box
Large fixed electrical connections, with terminal board cover in stainless steel AISI 316L. Special shaped terminals allow to fix the power supply cable, protecting it from loosening.

Electric motor
Three-phase and single-phase asynchronous type. Designed for maximum starting torques and torque curves specific to vibrating machines. Insulated windings using vacuum encapsulating up to size 35; using the "drop by drop" trickle system with class H resin for larger sizes. The rotor is die cast aluminium.

Casing
In stainless steel AISI 316L, with especially studied design to reduce deposits of dusts and liquids.

MVSS-P

Category: II 2 D

Level of protection: IP66

Temperature class: 120°C

EC certificate: LCIE 03 ATEX 6005 X

Areas of use: 21, 22

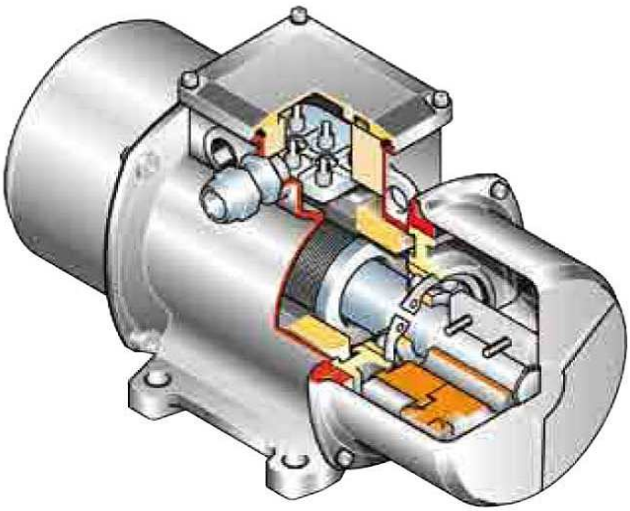

Bearing flange
Constructed in cast iron (spheroidal or grey) or in aluminium with steel bearing seat. The geometry of the flange transmits the load to the casing uniformly.

Bearings
The lower and upper bearings have been studied to support the relative load and therefore they have a particular geometry, especially designed and made for Italvibras.

Motor shaft
In treated steel alloy (Isothermic hardening) resistant to stress.

Eccentric weights
Allow continual adjustment of the centrifugal force. This adjustment is realized by a graduated scale, which expresses the centrifugal force as a percentage of the maximum centrifugal force.
A patented system (patent N° MO98A000194), called ARS, prevents adjustment errors.

Weight covers
In stainless steel AISI 304 with thickness measuring 1.2 to 1.5mm, to unite mechanical resistance to the guaranteed protection of stainless steel.

Surface treatment
Electro polishing of the surface to obtain a smooth, bright, uniform surface.

External screws
In stainless steel AISI 304.

Other features
Identification plate in AISI 316L stainless steel.

Certifications MVSS

Regulation CAN/CSA - C22.2 N. 100-95, file n° LR100948 Class 4211 01 – Motors and generators.

Mechanical protection IP66 (EN 60529), protection against impacts IK 08 (EN 50102)

Certificate GOST-R n° POCC IT.AH50.B13978, standards GOST R 50615, GOST 17770, GOST 12.2.030, GOST R 51318.14.1, GOST R 51318.14.2, GOST R 51317.3.2, GOST R 51317.3.3.

Comply with the applicable European Union directives

Certifications MVSS-P

II 2 D - Temperature class 120°C - CENELEC EN 50014 - EN 50281-1-1 Certificate n. LCIE 03 ATEX 6005 X

Compliance with applicable European Union directives: Low Voltage 2006/95/CE, ATEX (94/9/CE),

MVSS 36 STAINLESS STEEL ELECTRIC VIBRATOR SERIES

2 poles		
Hz	50	60
RPM	3000	3600

italvibras g.silingardi USA

three-phase

DESCRIPTION					MECHANICAL FEATURES						ELECTRICAL FEATURES			
Part Number	Model	Design	Frame Size		Static Moment* in-lbs		Centrifugal Force lbs		Weight lbs		Power Output HP		Max Current A	
					50 Hz	60 Hz	50 Hz	60 Hz	50 Hz	60 Hz	50 Hz	60 Hz	400 V 50 Hz	460 V 60 Hz
600328	MVSS 36-380	S02	00	•	1.0	1.0	266	383	17.2	17.2	0.18	0.18	0.35	0.30
600329	MVSS 36-480	S02	01	•	1.8	1.3	464	480	18.0	17.6	0.18	0.18	0.35	0.30
600330	MVSS 36-660	S02	10	•	2.6	1.8	669	653	27.5	26.4	0.24	0.26	0.60	0.50
600331	MVSS 36-1050	S02	20	•	4.3	2.8	1107	1036	40.7	38.5	0.44	0.53	0.80	0.75
600515	MVSS 36-1660	S08	30	•	6.8	4.5	1727	1659	55.0	52.8	0.67	0.7	1.10	1.00
600333	MVSS 36-2530	S02	35	•	9.6	6.3	2431	2334	66.0	63.8	1.1	1.2	1.75	1.75
600334	MVSS 36-3280	S02	40	•	13.3	8.9	3399	3263	87.1	83.6	1.5	1.9	2.30	2.00
600335	MVSS 36-4100	S02	50	•	17.8	11.1	4530	4077	107	102	2.2	2.2	3.50	3.00

For 230 V, 60 Hz amperage, double the 460 V, 60 Hz amperage.

OVERALL DIMENSIONS (inches)																	
Model	Design	Type	A	B	C	D	E	Foot holes øG	Foot holes N*	F	H	I	L	M	N
MVSS36-380	S02	W	8.23	5.94	4.92	2.44-2.91**	4.17	0.35	4	0.39	2.40	1.77	3.94	4.02	4.61
MVSS 36-480	S02	W	8.86	5.94	4.92	2.44-2.91**	4.17	0.35	4	0.39	2.40	2.09	3.94	4.02	4.61
MVSS 36-660	S02	W	10.04	6.93	5.98	3.54	4.92	0.51	4	0.47	2.87	2.13	4.88	4.80	5.55
MVSS 36-1050	S02	W	11.18	7.87	6.57	4.13	5.51	0.51	4	0.59	3.25	2.48	5.63	5.39	6.30
MVSS 36-1660	S08	W	12.13	8.07	8.07	4.72	6.69	0.67	4	0.67	3.68	2.48	6.61	6.30	7.17
MVSS 36-2530	S02	W	13.94	9.13	8.07	4.72	6.69	0.67	4	0.79	4.11	3.03	7.13	6.38	7.99
MVSS 36-3280	S02	W	17.24	9.65	9.06	5.51	7.48	0.67	4	0.98	4.57	4.06	7.91	7.09	8.86
MVSS 36-4100	S02	W	17.24	9.65	9.06	5.51	7.48	0.67	4	0.98	4.57	4.06	7.91	7.09	8.86

single-phase

DESCRIPTION					MECHANICAL FEATURES						ELECTRICAL FEATURES			
Part Number	Model	Design	Frame Size		Static Moment* in-lbs		Centrifugal Force lbs		Weight lbs		Power Output HP		Max Current A	
					50 Hz	60 Hz	50 Hz	60 Hz	50 Hz	60 Hz	50 Hz	60 Hz	400 V 50 Hz	460 V 60 Hz
600328	MVSS 36-380	S02	00	•	1.0	1.0	266	383	17.2	17.2	0.15	0.15	0.75	1.52
600329	MVSS 36-480	S02	01	•	1.8	1.3	464	480	18.0	17.6	0.15	0.15	0.75	1.52
600330	MVSS 36-660	S02	10	•	2.6	1.8	669	653	27.5	26.4	0.24	0.27	1.25	2.40
600331	MVSS 36-1050	S02	20	•	4.3	2.8	1107	1036	40.7	38.5	0.46	0.48	2.30	4.50
600515	MVSS 36-1660	S08	30	•	6.8	4.5	1727	1659	55.0	52.8	0.60	0.7	3.25	7.00

OVERALL DIMENSIONS (inches)																			
Model	Design	Type	A	B	C	D	E	Foot holes øG	Foot holes N*	F	H	I	L	M	N	Capacitor (µF) 220 V 50 Hz	Capacitor (µF) 115 V 60 Hz
MVSS36-380	S02	W	8.23	5.94	4.92	2.44-2.91**	4.17	0.35	4	0.39	2.40	1.77	3.94	4.02	4.61	10	28
MVSS 36-480	S02	W	8.86	5.94	4.92	2.44-2.91**	4.17	0.35	4	0.39	2.40	2.09	3.94	4.02	4.61	10	28
MVSS 36-660	S02	W	10.04	6.93	5.98	3.54	4.92	0.51	4	0.47	2.87	2.13	4.88	4.80	5.55	16	25
MVSS 36-1050	S02	W	11.18	7.87	6.57	4.13	5.51	0.51	4	0.59	3.25	2.48	5.63	5.39	6.30	12.5	50
MVSS 36-1660	S08	W	12.13	8.07	8.07	4.72	6.69	0.67	4	0.67	3.68	2.48	6.61	6.30	7.17	25	90

* Working Moment = 2 × Static Moment. Static Moment = Unbalance.

** Slot.

Approval for European Directive 94/9/EC; ATEX II2D, tD A21 IP66, available upon request.

All listed products are in compliance with GOST R 50615, GOST 17770, GOST 12.2.030, GOST R 51318.14.1-14.2, GOST R 51317.3.2-3.3.

In compliance with all applicable European Directives.

Distributed By:

ChicagoVibratorProducts
Flow and Compaction
Division of CVP Group
800-842-7284 (P)
866-247-7538 (F)
Solutions@ChiVib.com
www.ChicagoVibrator.com
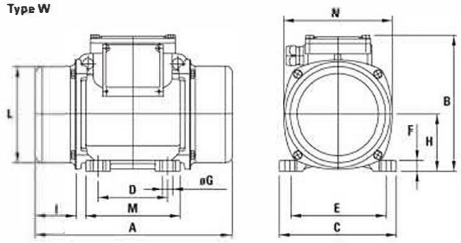
Type W